SHRI SIDDHAROODA DESIGN

THE CAD EXPERTS

Engineering Services offered:

CAD/CAM/CAE & Manufacturing support

ESTEEMED CUSTOMERS TO WHOM WE HAVE SUPPORTED TILL NOW

ESTEEMED CUSTOMERS AND DOMAINS WHOM WE HAVE SUPPORTED TILL NOW

CENTRAL GOVT

- ISRO
- ICHR
- INDIAN RAILWAYS
- BSNL
- BHEL

OEM

- BOSCH
- DO ALL ENGG
- POWER TECH
- DASH HYDRAULICS
- PRECISION ENGINERING
- ROYAL NAG AVIATION
- GAS TECH

DOMAINS

- AUTOMOTIVE
- OIL & GAS
- FOOD PROCESSING
- AEROSPACE
- NPD
- REVERSE ENGINEERING
- CIVIL
- ELECTRONICS
- EDUCATION

CAD Capabilities

CAD Capabilities

Input

Whatsapp chat

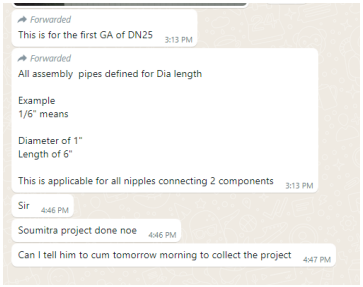

Standard Items Step file

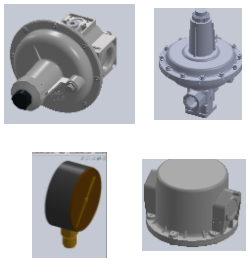

Hand Sketch

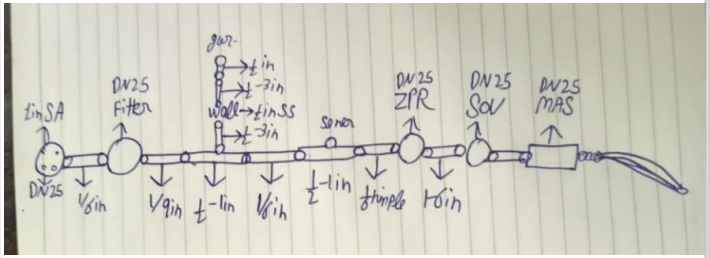

Output

PDF Output

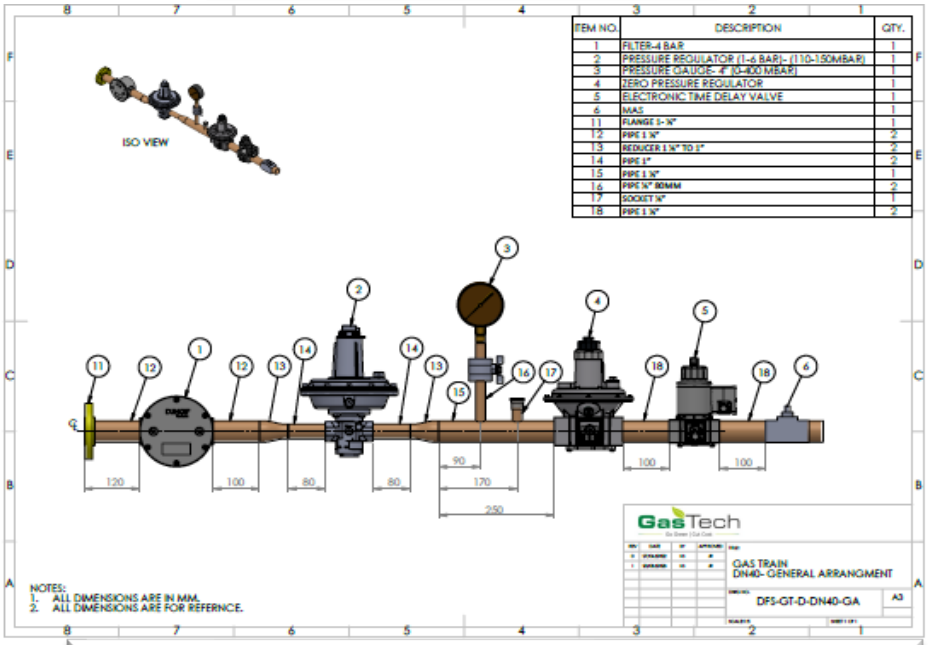

AutoCad Soft Copy in DXF Format

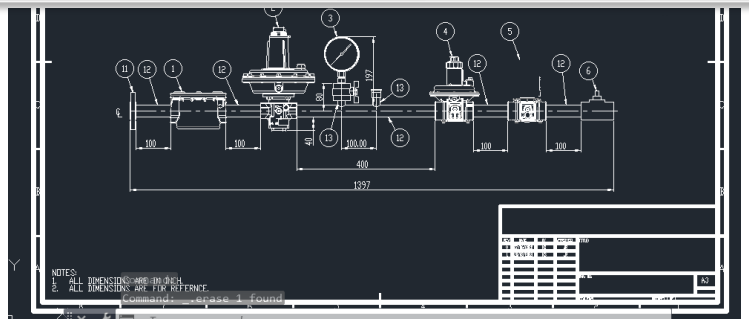

CAD Capabilities

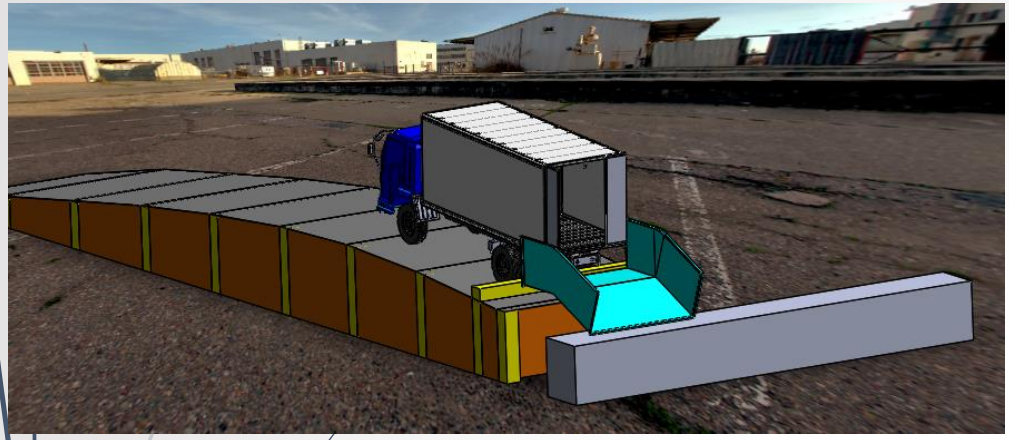

Concept design of Conveyor system for South African company

20,000 ltr Syntax Tank arrangement on terrace of 18 floor high tower residential apartment

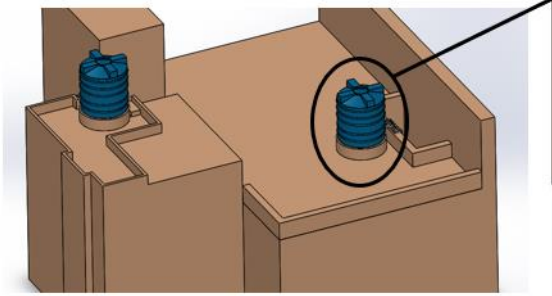

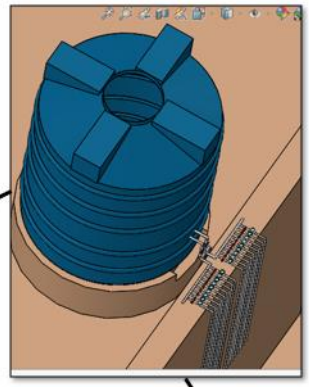

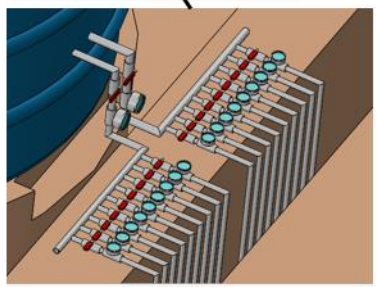

Testing fixture concept designs for a Electrical/Electronics Company

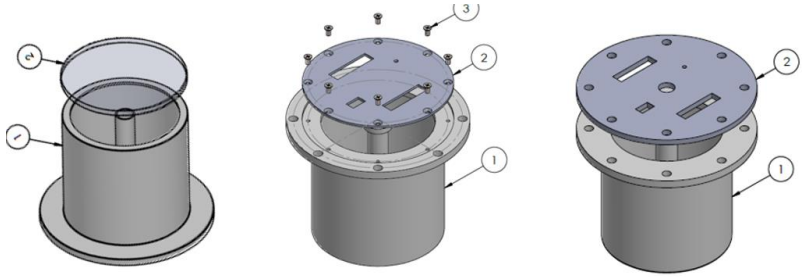

CAD Capabilities

Science Project models created for sale in B2B websites

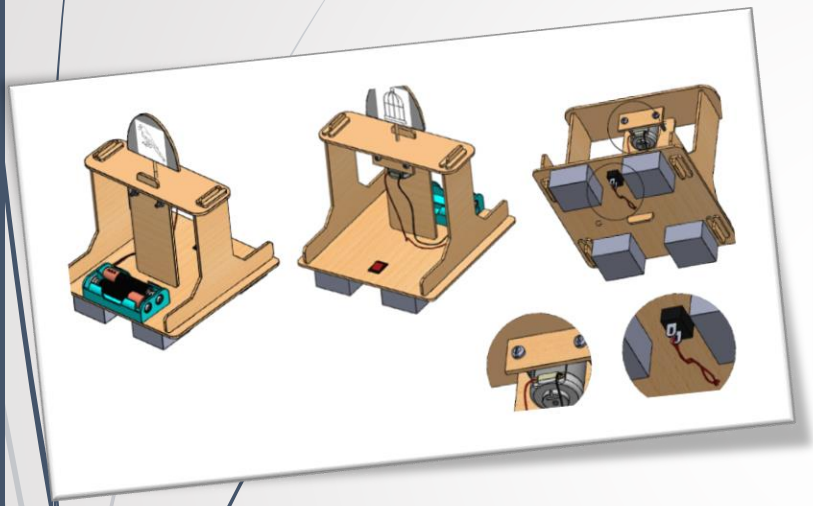

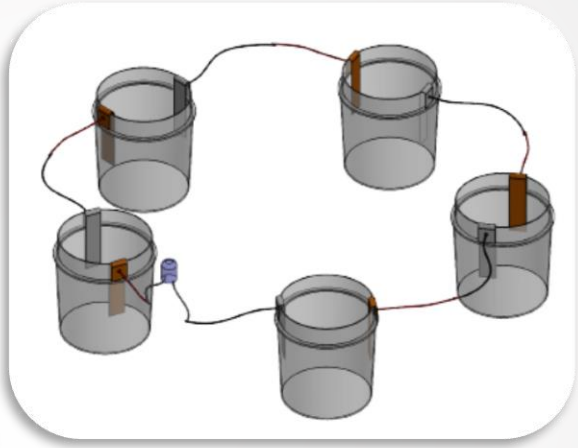

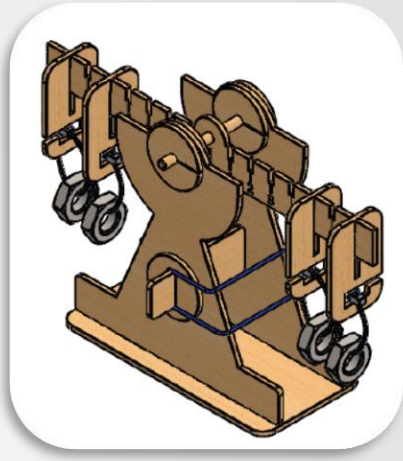

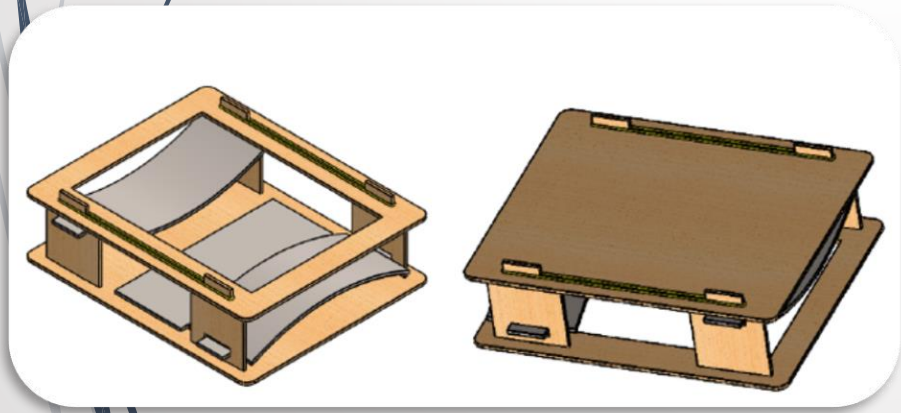

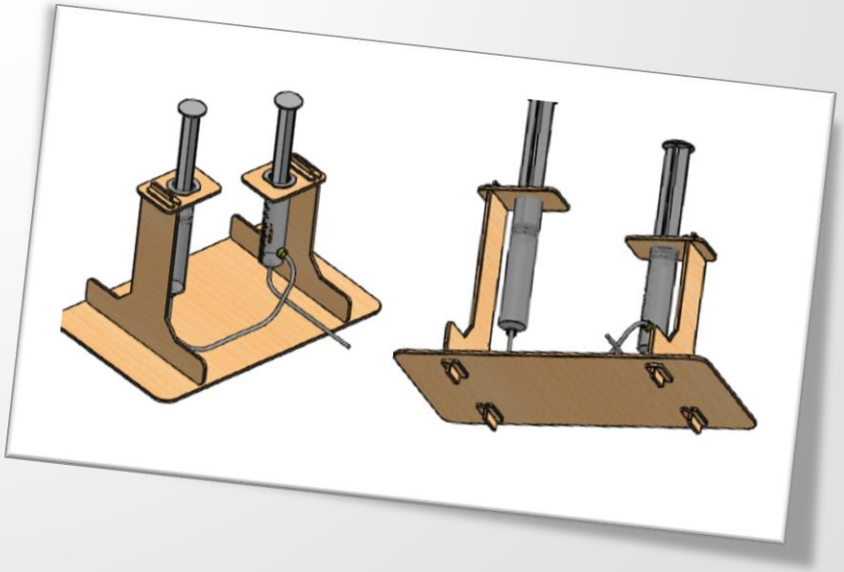

SHEETMETAL CUSTOM SIZE PANEL DESIGN

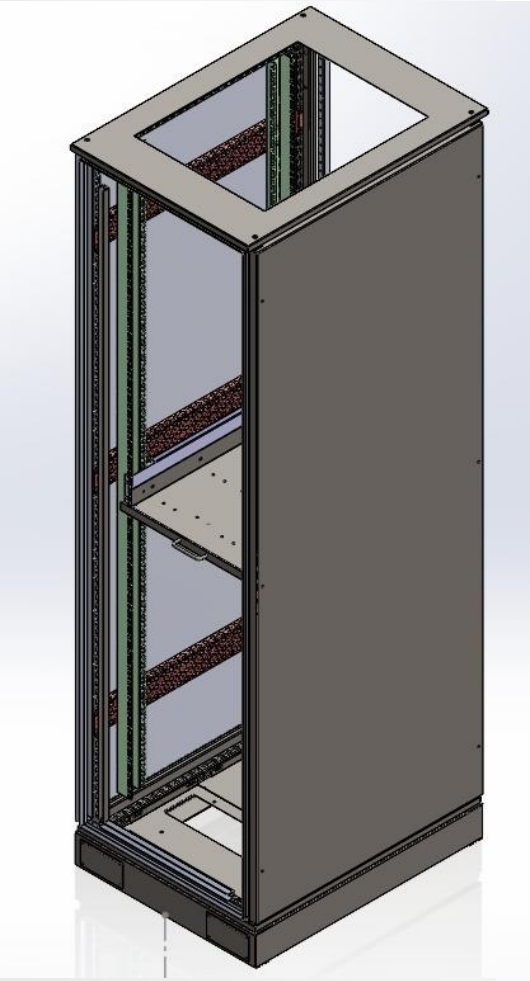

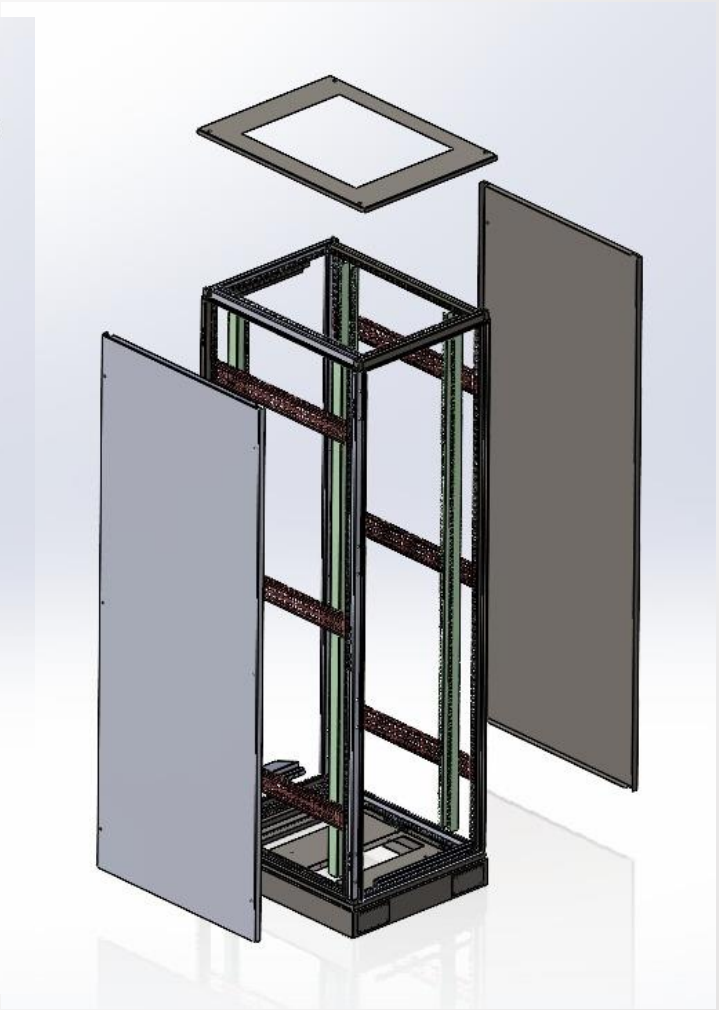

SHEETMETAL EQUIPMENT DESIGN SAMPLES

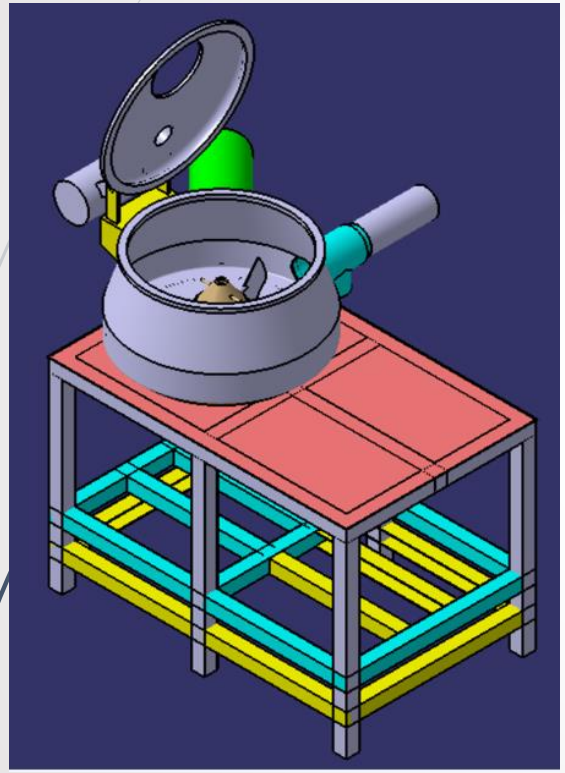

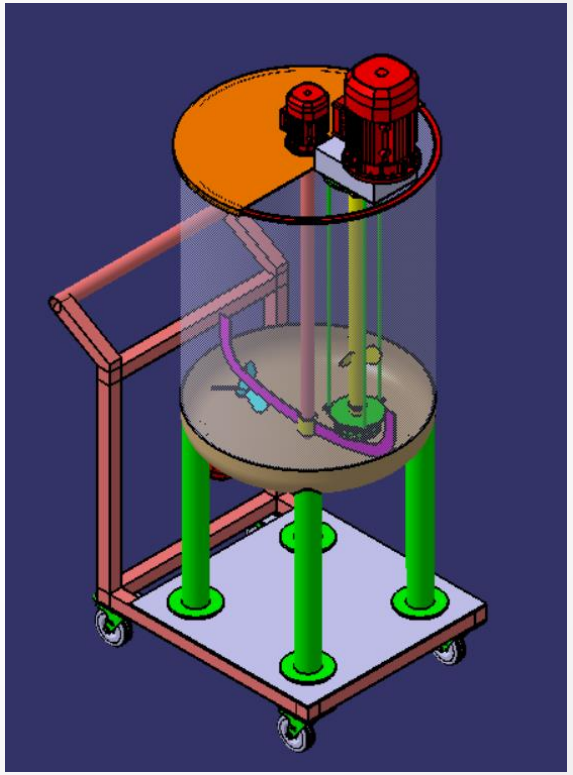

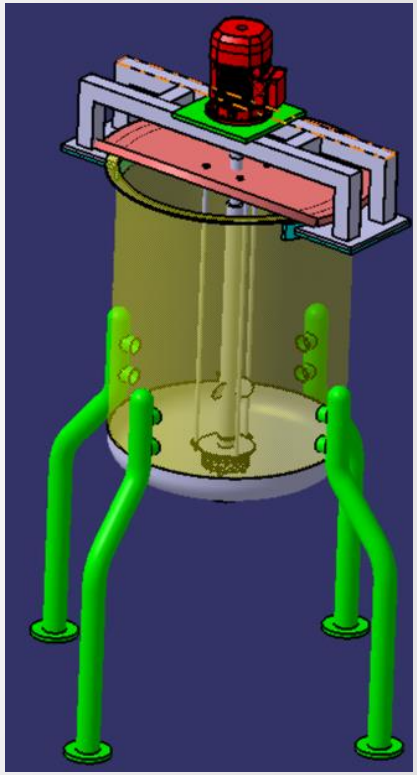

ASSEMBLY

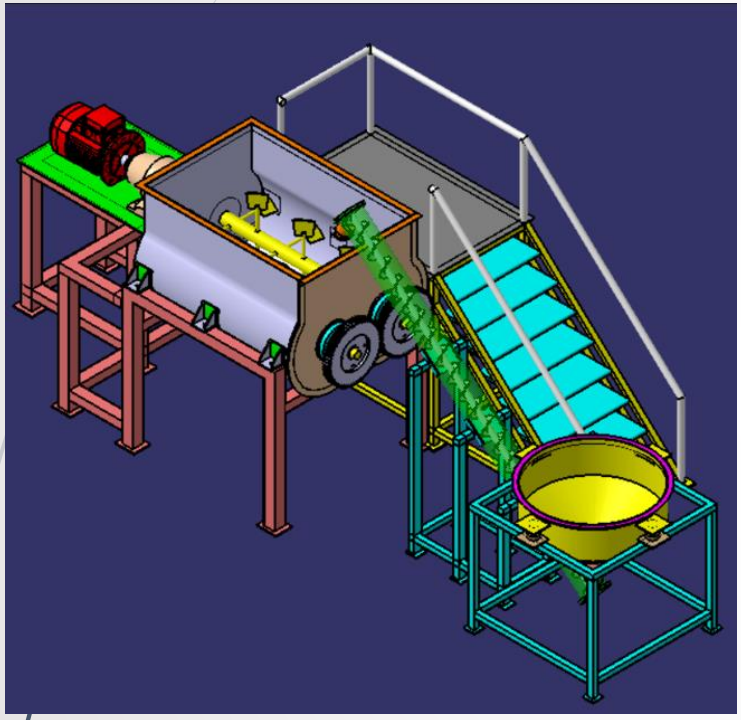

DETAILING

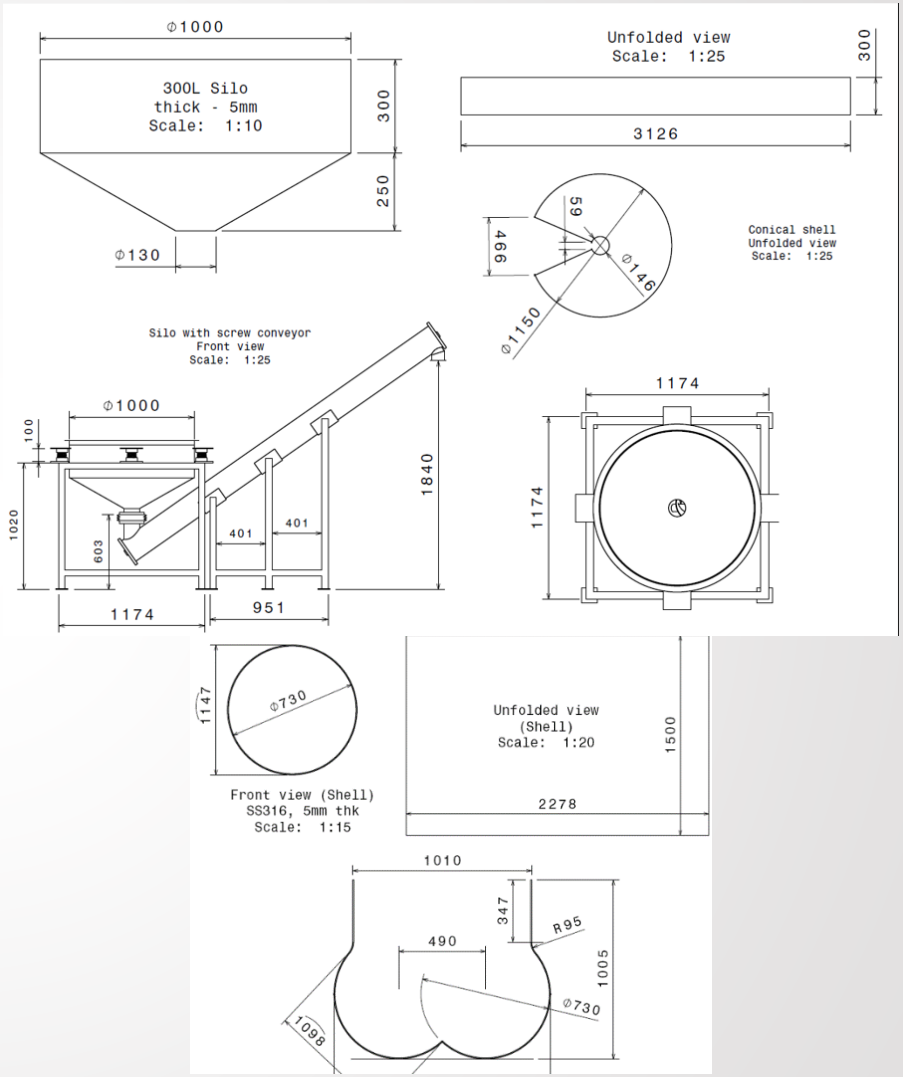

ASSEMBLY

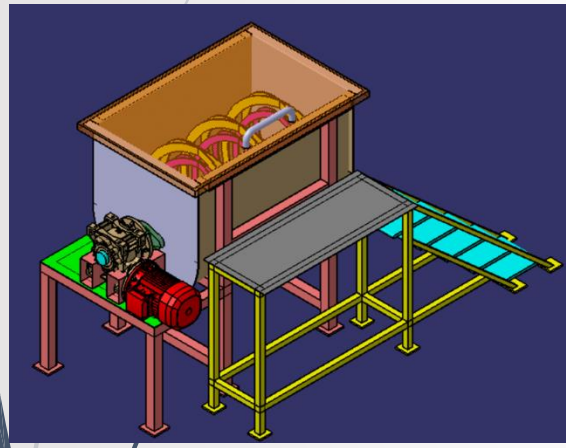

DETAILING

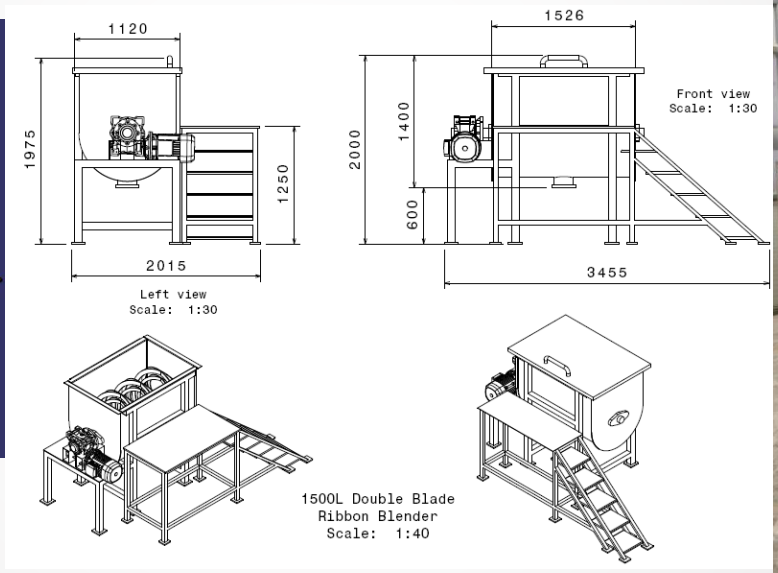

EQUIPMENT MANUFACTURED

ASSEMBLY

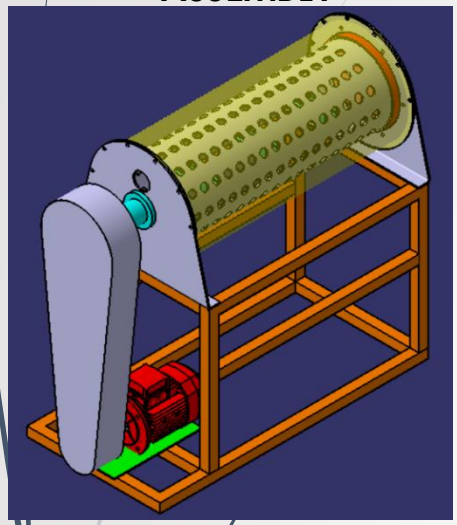

UNFOLDED/FLATTERN

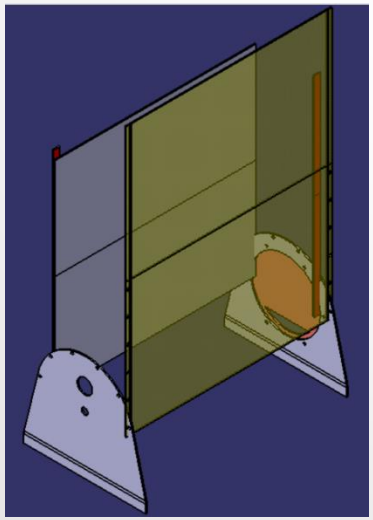

DETAILING

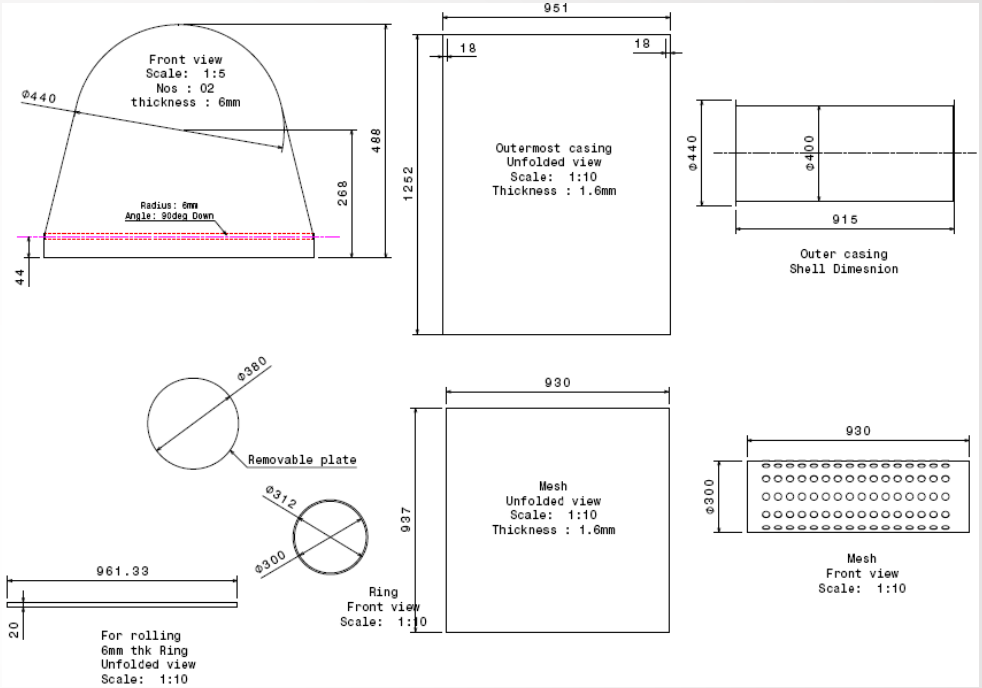

ASSEMBLY

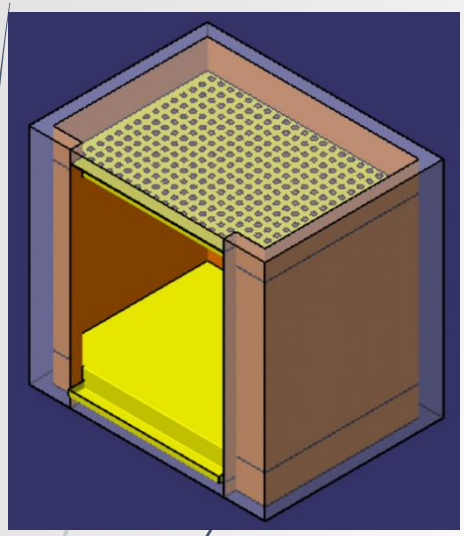

UNFOLDED/FLATTERN

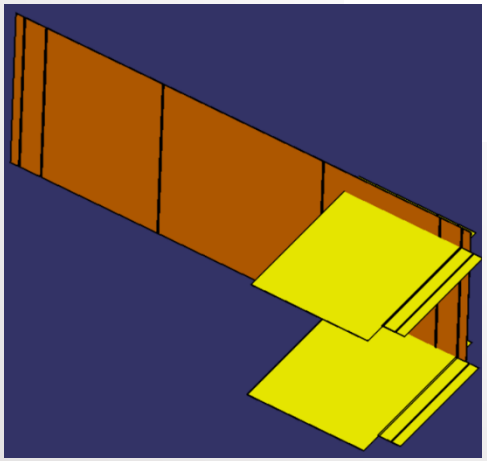

DETAILING

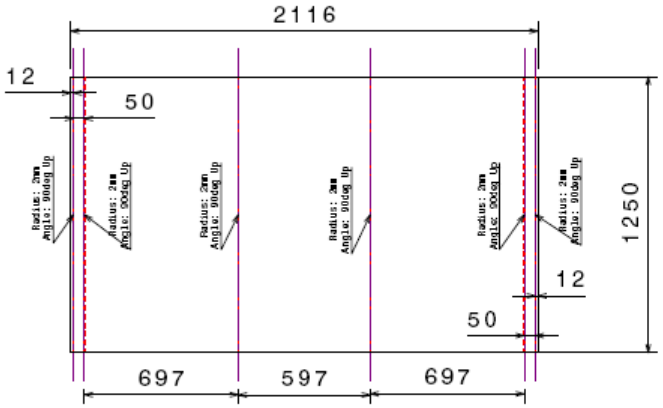

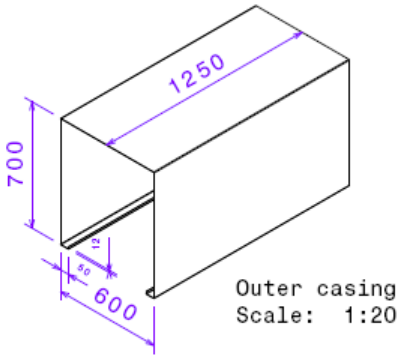

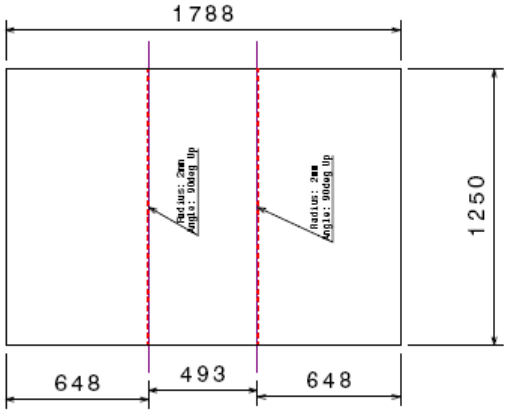

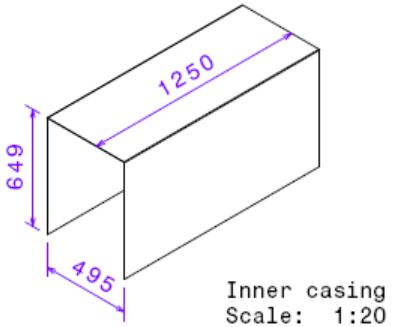

ASSEMBLY

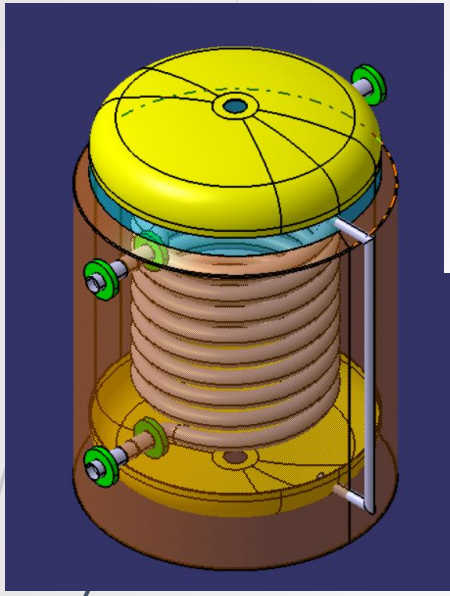

UNFOLDED/FLATTERN

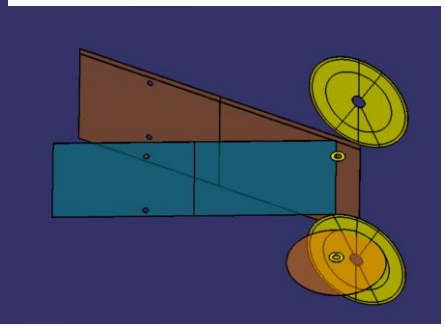

WELDMENT

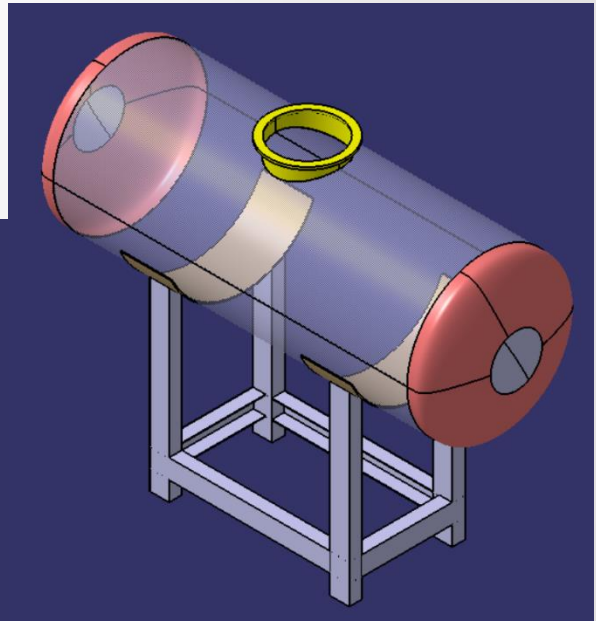

UNFOLDED/FLATTERN

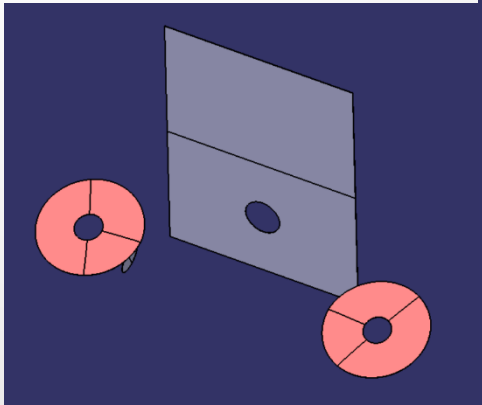

PART

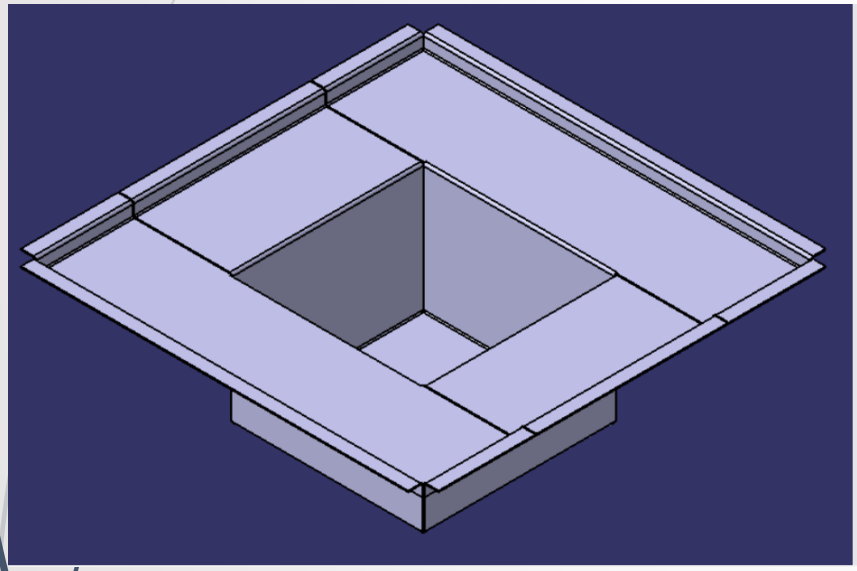

UNFOLDED/FLATTERN

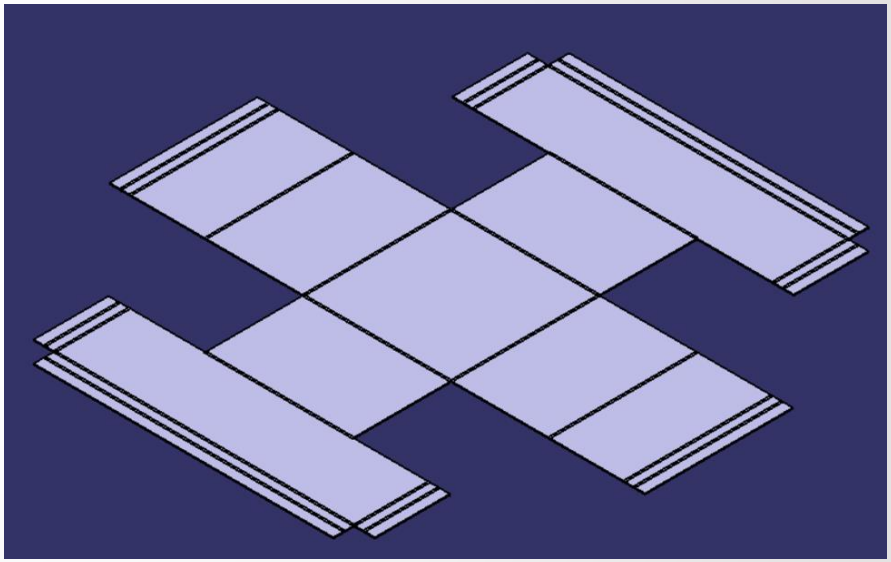

ASSEMBLY

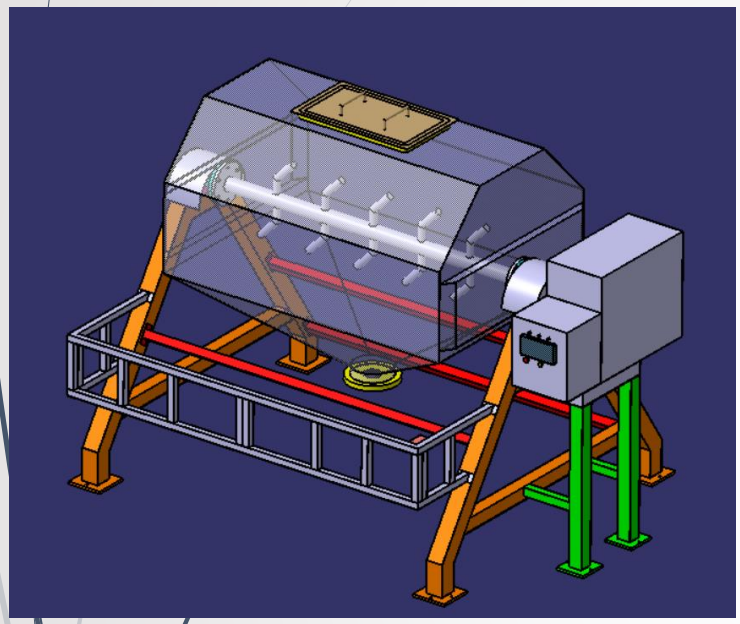

DETAILING

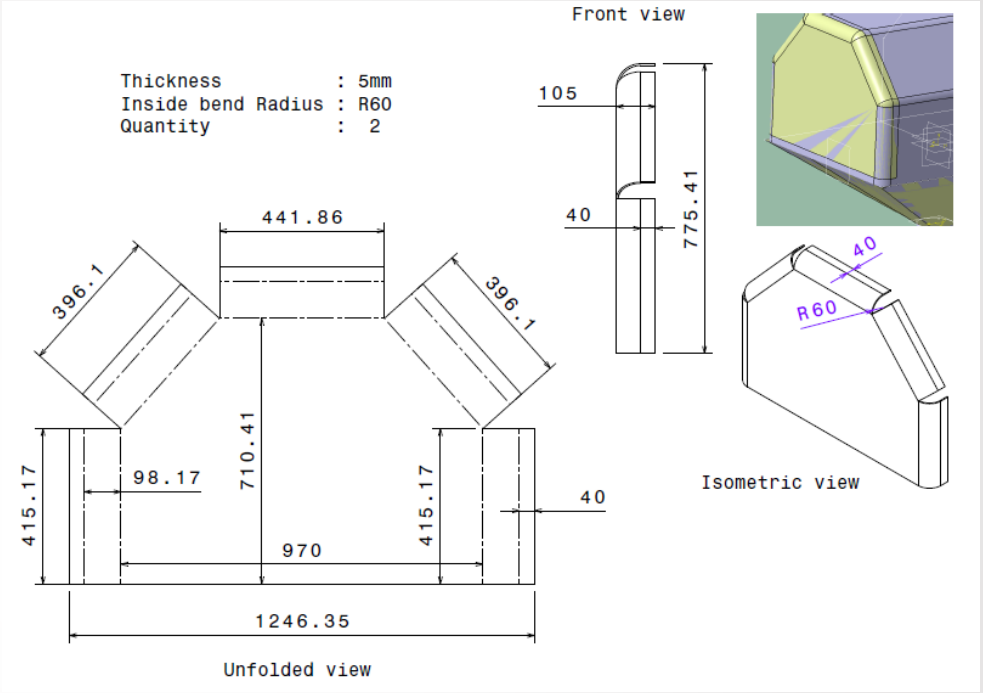

UNFOLDED/FLATTERN

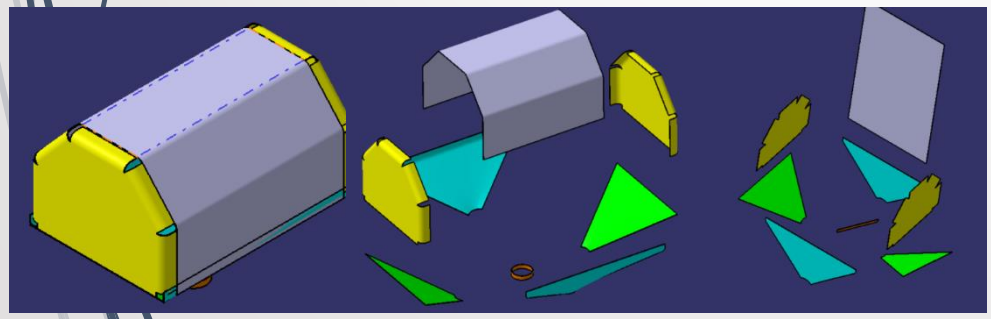

ASSEMBLY

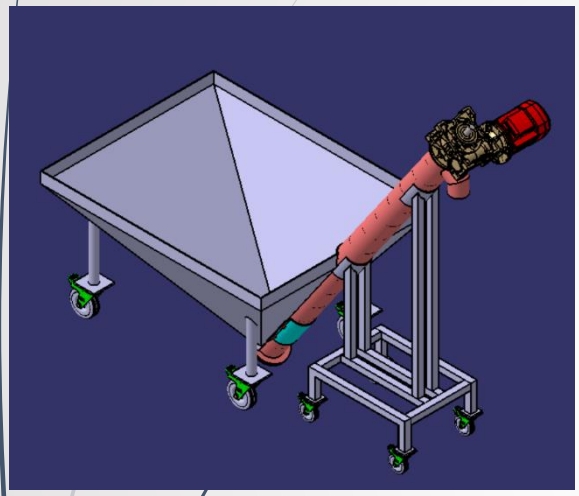

UNFOLDED/FLATTERN

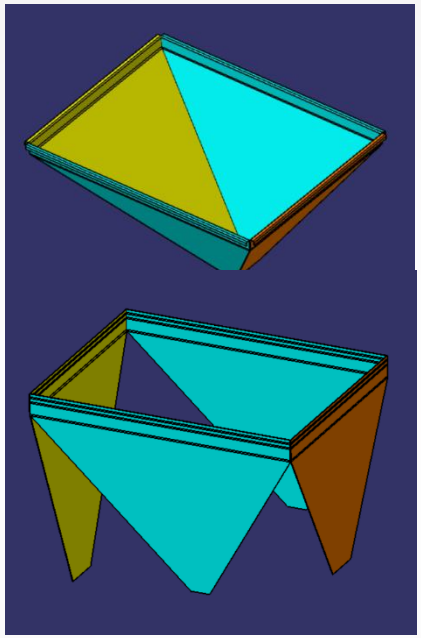

DETAILING

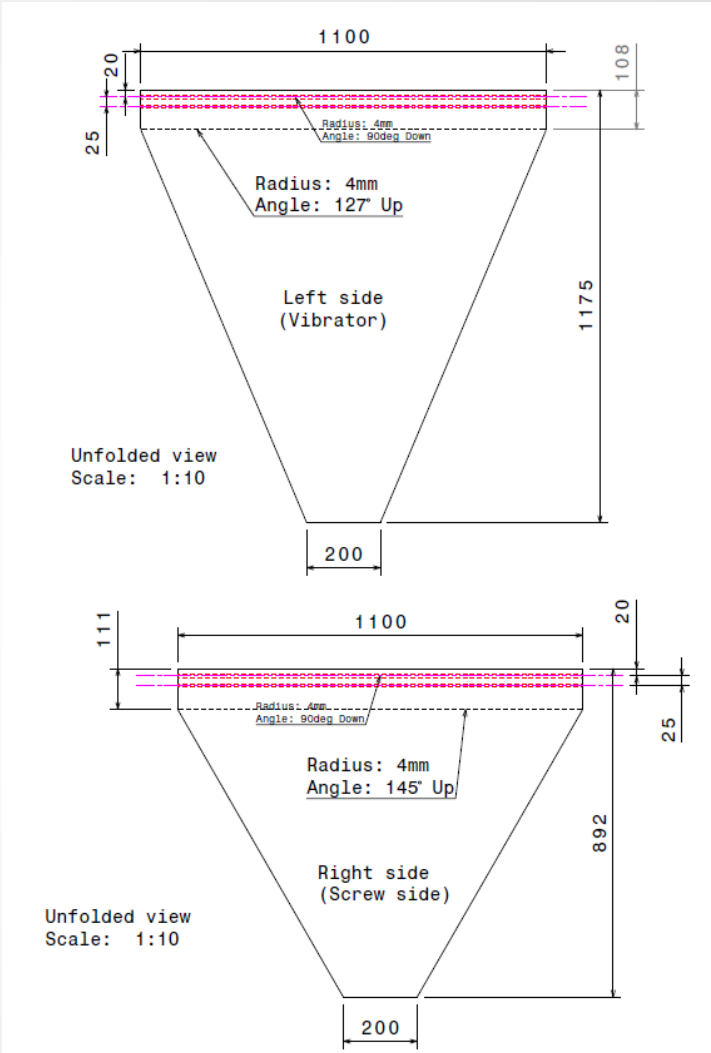

ASSEMBLY

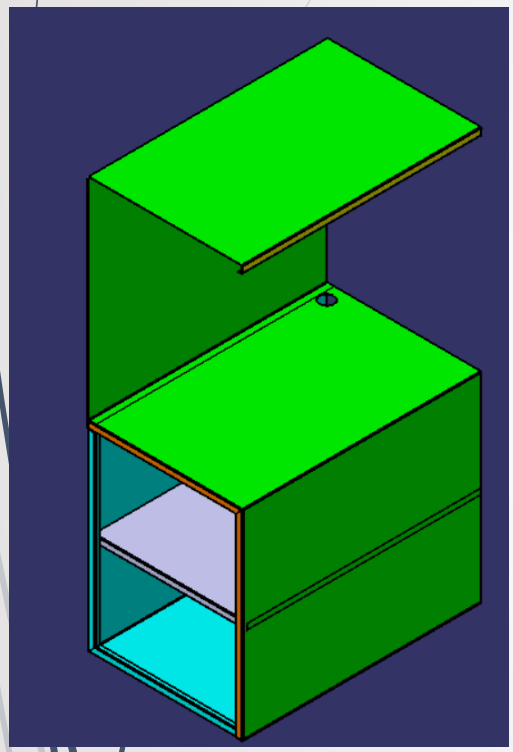

UNFOLDED/FLATTERN

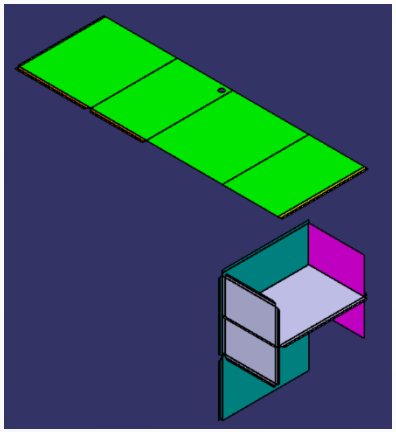

DETAILING

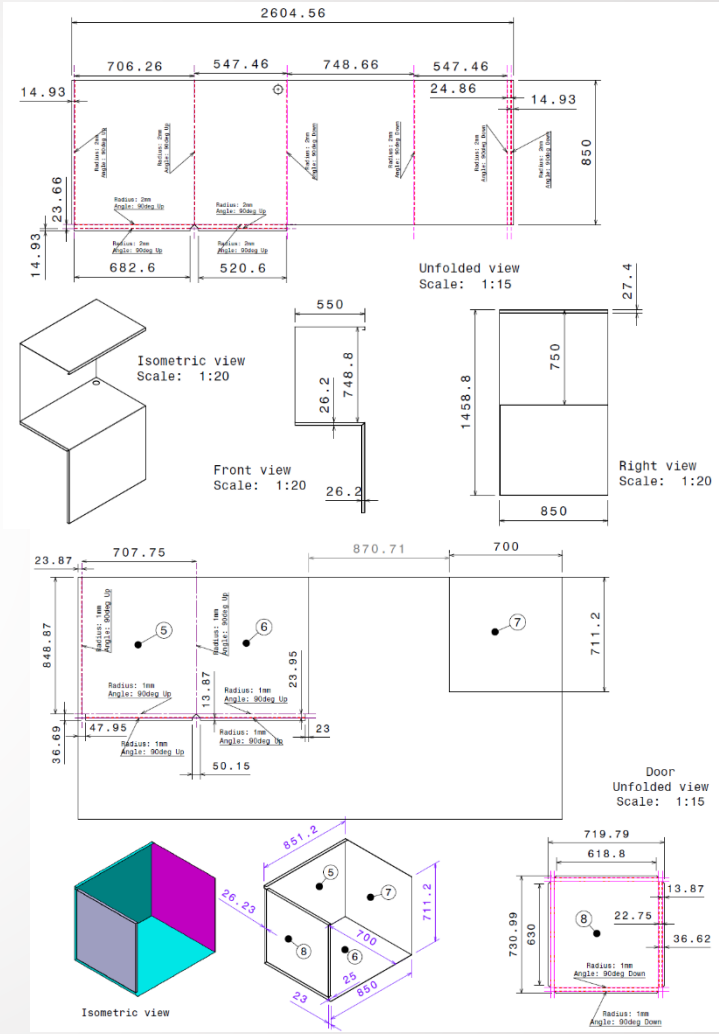

ASSEMBLY

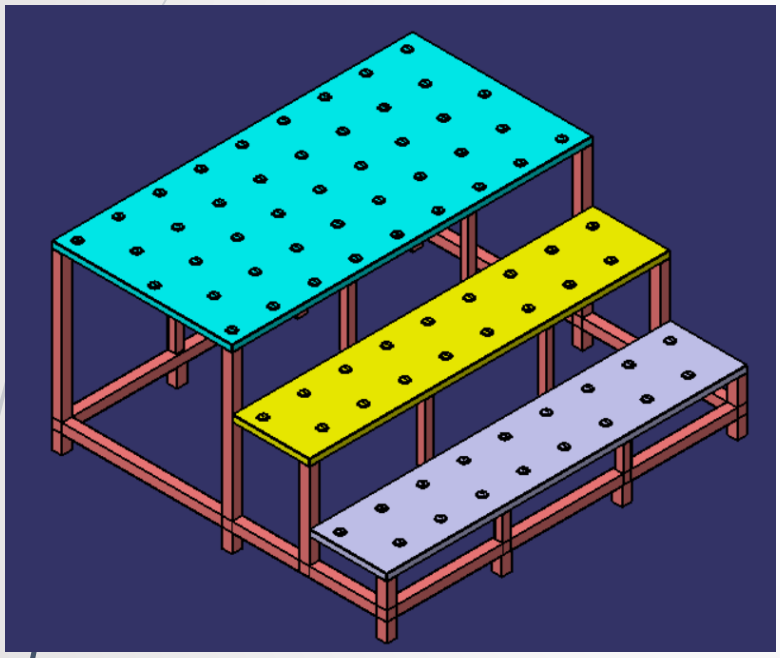

PARTS

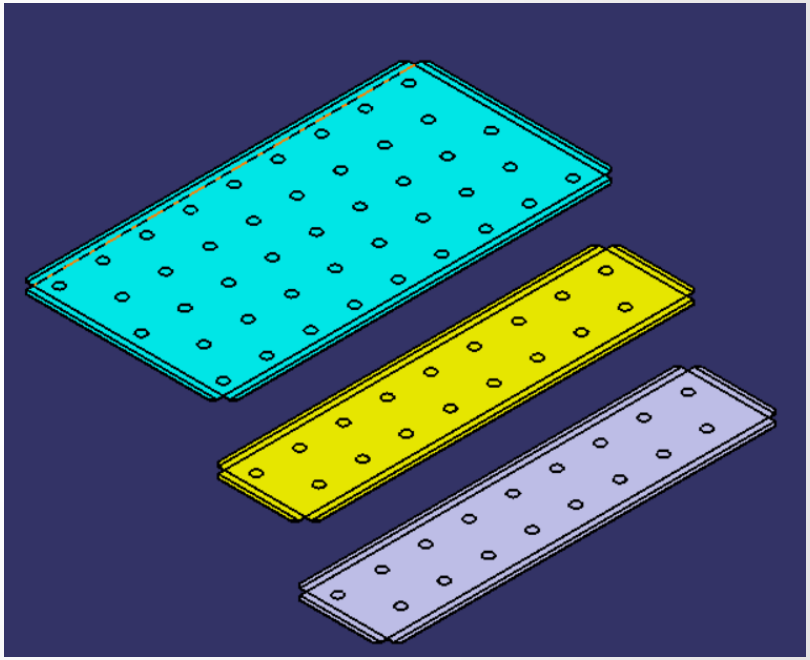

NEW PRODUCT DESIGN (NPD) SAMPLES (WITH FEA)

Hydraulic Press Machine Designed from scratch as per customer requirement and Industry standard specifications

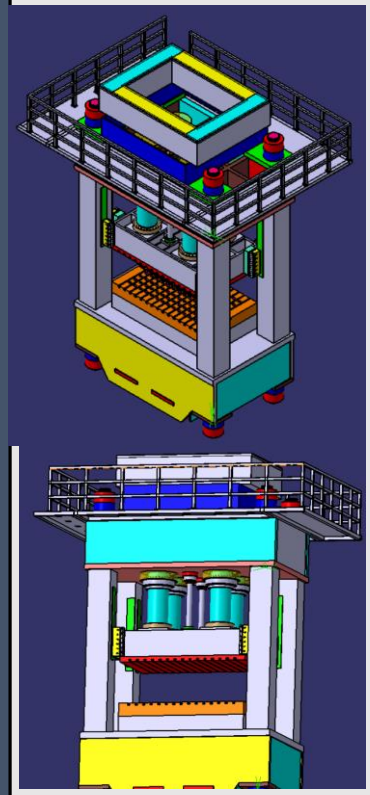

Final Machine Manufactured after Ansys Validation

Same model being used to analyze under different load conditions

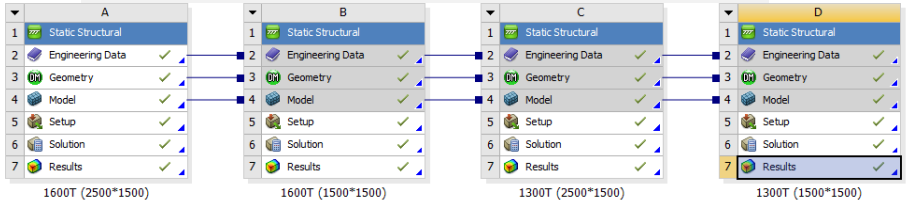

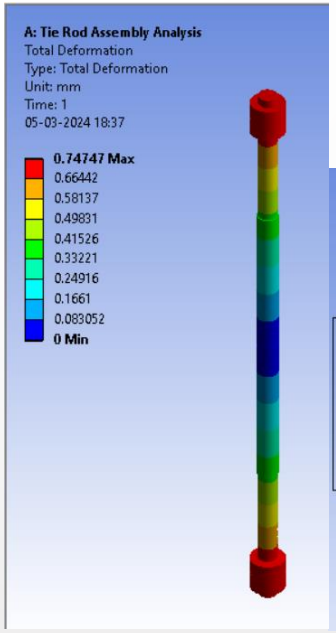

Analysis to check **Deflection, Deformation and Stresses** generated on the moving bed and Tie Rod at various Loads

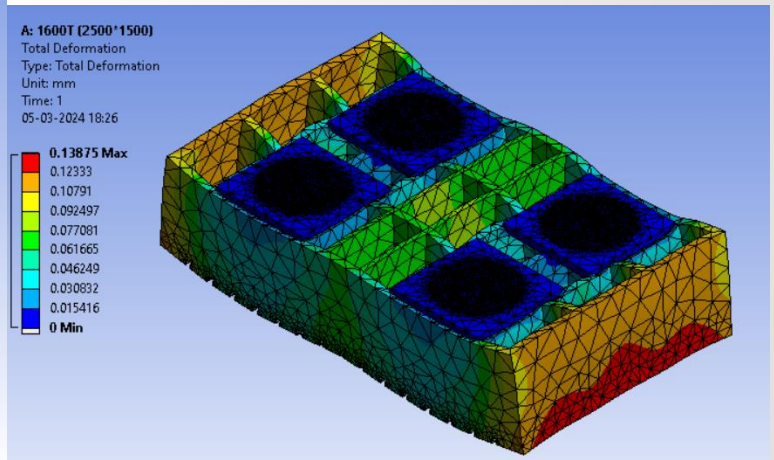

Input

Silos designed from scratch as per customer requirement for storage of edible oil

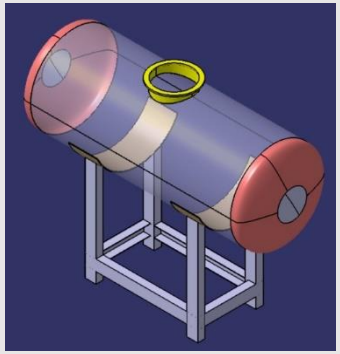

Output

Final Machine Manufactured after Ansys Validation

Analysis

Analysis to check **Deformation and Stresses** generated on the Container

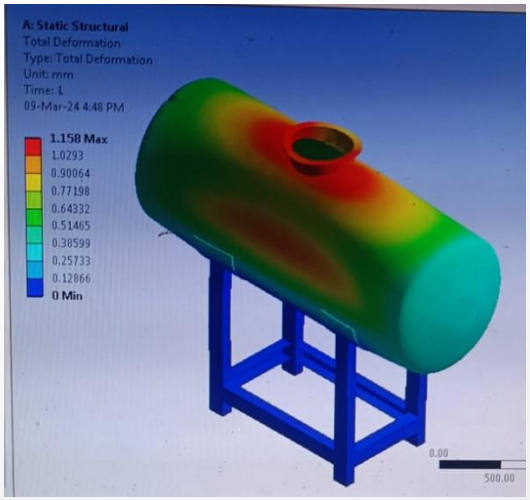

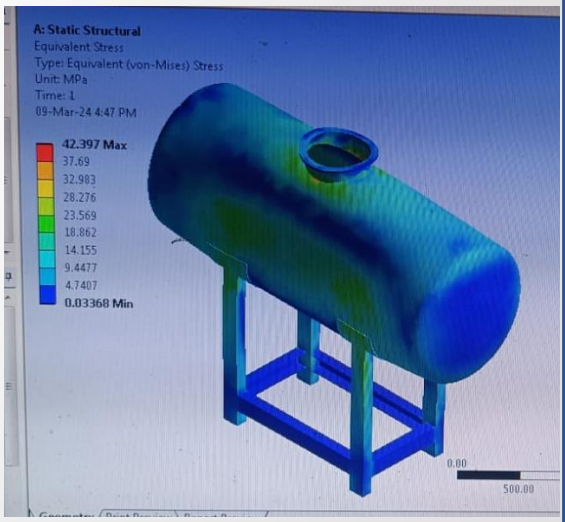

Input

Double-cone blender designed from scratch as per customer requirement

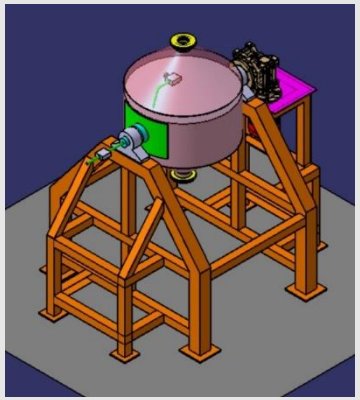

Analysis

Analysis to check **Deformation and Stresses** of the structure

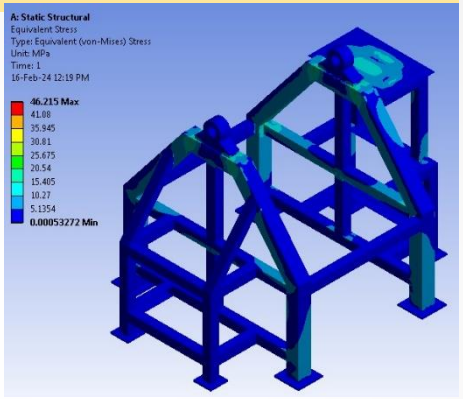

Torque Analysis to check 360 degree rotation of the blender

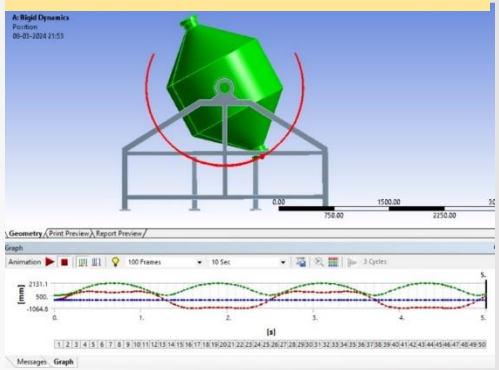

Output

Double-cone blender Manufactured after Ansys Validation

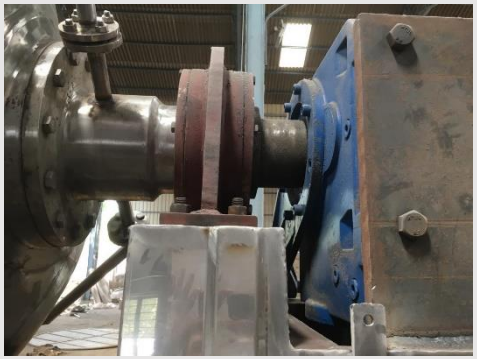

Input

Jacketed steam heating tank Designed from scratch as per customer requirement

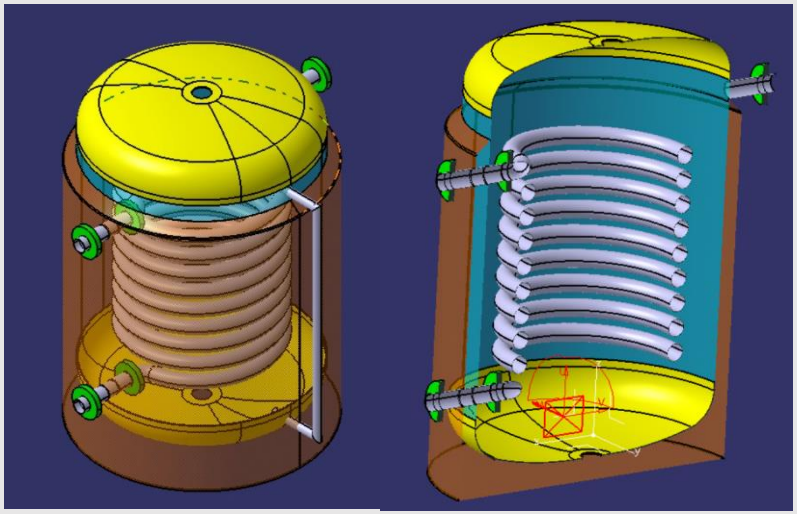

Absolute pressure	Boiling point	Specific volume (steam)	Density (steam)	Specific enthalpy of liquid water (sensible heat)		Specific enthalpy of steam (total heat)		Latent heat of vaporization		Specific heat	Dynamic viscosity
bar	°C	m3/kg	kg/m3	kj/kg	Kcal/kg	kj/kg	Kcal/kg	kj/kg	Kcal/kg	kj/kg.K	kg/m.s
0.02	17.51	67.006	0.015	73.45	17.54	2533.64	605.15	2460.19	587.61	1.8644	0.000010
0.03	24.10	45.667	0.022	101.00	24.12	2545.64	608.02	2444.65	583.89	1.8994	0.000010
0.04	28.98	34.802	0.029	121.41	29.00	2554.51	610.13	2433.10	581.14	1.8736	0.000010
0.05	32.90	28.194	0.035	137.77	32.91	2561.59	611.83	2423.82	578.92	1.8774	0.000010
0.06	36.18	23.741	0.042	151.50	36.19	2567.51	613.24	2416.01	577.05	1.8808	0.000010
0.07	39.02	20.510	0.049	163.38	39.02	2572.62	614.46	2409.24	575.44	1.8840	0.000010
0.08	41.53	18.105	0.055	173.87	41.53	2577.11	615.53	2403.25	574.07	1.8871	0.000010
0.09	43.79	16.204	0.062	183.28	43.78	2581.14	616.49	2397.85	572.72	1.8899	0.000010
0.1	45.83	14.675	0.068	191.84	45.82	2584.78	617.36	2392.94	571.54	1.8927	0.000010
0.2	60.09	7.650	0.131	251.46	60.06	2609.65	623.35	2358.40	563.30	1.9156	0.000011
0.3	69.13	5.229	0.191	289.31	69.10	2625.43	627.07	2336.13	557.97	1.9343	0.000011
0.4	75.89	3.993	0.250	317.65	75.87	2636.88	629.81	2319.23	553.94	1.9506	0.000011
0.5	81.35	3.240	0.309	340.57	81.34	2645.59	631.88	2305.42	550.64	1.9654	0.000012
0.6	85.95	2.732	0.366	359.93	85.97	2653.57	633.79	2293.64	547.83	1.9790	0.000012
0.7	89.96	2.365	0.423	376.77	89.99	2660.07	635.35	2283.30	545.36	1.9919	0.000012
0.8	93.51	2.087	0.479	391.73	93.56	2665.77	636.71	2274.05	543.15	2.0040	0.000012
0.9	96.71	1.869	0.535	405.21	96.78	2670.85	637.92	2265.65	541.14	2.0156	0.000012
1	99.63	1.694	0.590	417.51	99.72	2675.43	639.02	2257.92	539.30	2.0267	0.000012
1.1	102.32	1.549	0.645	428.84	102.43	2679.61	640.01	2250.76	537.59	2.0373	0.000012
1.2	104.81	1.428	0.700	439.36	104.94	2683.44	640.93	2244.09	535.99	2.0476	0.000012
1.3	107.13	1.325	0.755	449.19	107.29	2686.98	641.77	2237.79	534.49	2.0576	0.000013
1.4	109.32	1.236	0.809	458.42	109.49	2690.28	642.56	2231.86	533.07	2.0673	0.000013
1.5	111.37	1.159	0.863	467.13	111.57	2693.36	643.30	2226.23	531.73	2.0768	0.000013
1.6	113.32	1.091	0.916	475.38	113.54	2696.25	643.99	2220.87	530.45	2.0860	0.000013
1.7	115.17	1.031	0.970	483.22	115.42	2698.97	644.64	2215.75	529.22	2.0950	0.000013
1.8	116.93	0.977	1.023	490.70	117.20	2701.54	645.25	2210.84	528.05	2.1037	0.000013
1.9	118.62	0.929	1.076	497.85	118.91	2703.98	645.83	2206.13	526.92	2.1124	0.000013
2	120.23	0.885	1.129	504.71	120.55	2706.29	646.39	2201.59	525.84	2.1208	0.000013
2.2	123.27	0.810	1.235	517.63	123.63	2710.60	647.42	2192.98	523.78	2.1372	0.000013
2.4	126.09	0.746	1.340	529.64	126.50	2714.55	648.36	2184.91	521.86	2.1531	0.000013
2.6	128.73	0.693	1.444	540.88	129.19	2718.17	649.22	2177.30	520.04	2.1685	0.000013
2.8	131.20	0.648	1.548	551.45	131.71	2721.54	650.03	2170.06	518.32	2.1835	0.000013
3	133.54	0.608	1.651	561.44	134.10	2724.66	650.77	2163.22	516.68	2.1981	0.000013
3.5	138.87	0.524	1.908	584.28	139.55	2731.63	652.44	2147.35	512.89	2.2331	0.000014
4	143.63	0.462	2.163	604.68	144.43	2737.63	653.87	2132.95	509.45	2.2664	0.000014
4.5	147.92	0.414	2.417	623.17	148.84	2742.88	655.13	2119.71	506.29	2.2983	0.000014
5	151.85	0.375	2.669	640.12	152.89	2747.54	656.24	2107.42	503.35	2.3289	0.000014

Output

Final Machine Manufactured images